Jetstream 31/ CAR Integration Status 30NOV05

Adaptive Aerospace Corporation Proprietary
All rights reserved. Unpublished work, ©2005
Information is proprietary to AAC or one of its' customers

Integration items

- CAR structural / aero integration
  - Forward fuselage modification
  - Structural attachment
  - Rotating fairing design
  - Rotating elements
- CAR control
  - Rotating element indication and control
- Flight safety
  - Structural analytical basis
  - Flight test

Adaptive Aerospace Corporation Proprietary
All rights reserved. Unpublished work, ©2005
Information is proprietary to AAC or one of its' customers

CAR structural / aero integration

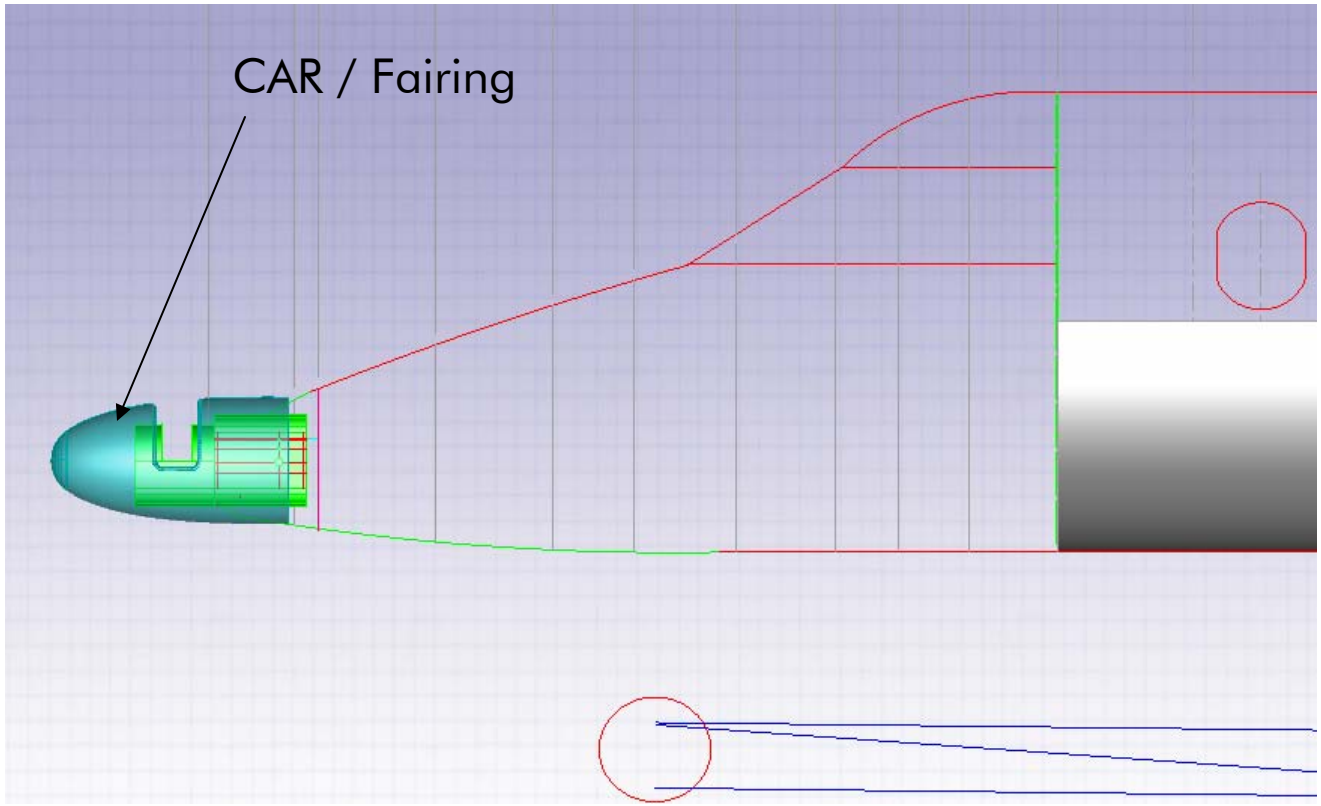

Looking inboard at LHS of J-31

Adaptive Aerospace Corporation Proprietary
All rights reserved. Unpublished work, ©2005
Information is proprietary to AAC or one of its' customers

Forward fuselage modification

- Utilize shear / tension fitting attachment

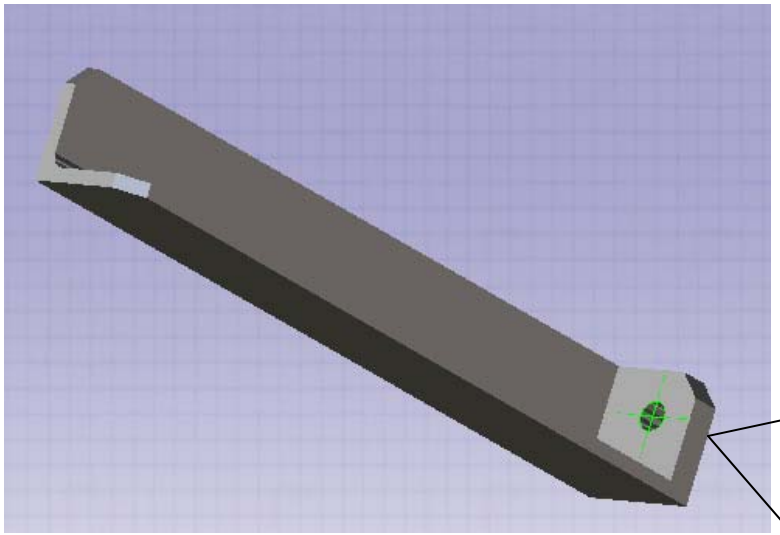

Notional Fitting

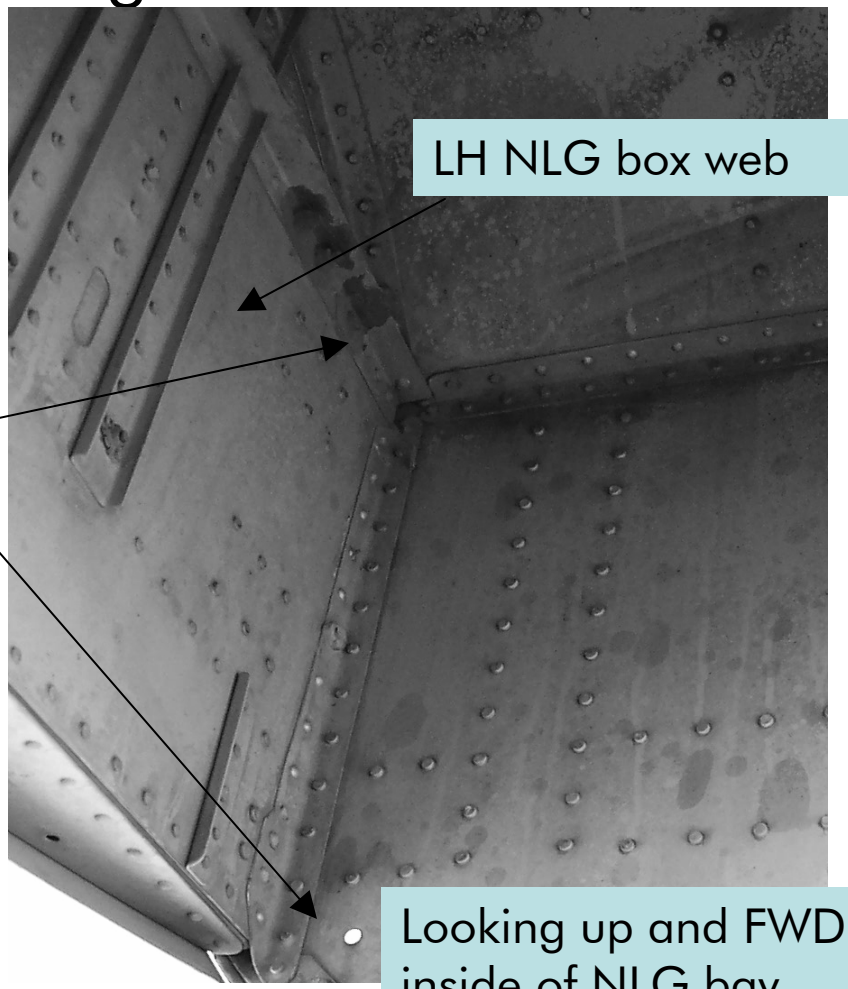

Design intent:

-Shear loads into existing structure

-Reinforce locally

-Rapid front end structure installation- 4 bolt assembly is goal

Adaptive Aerospace Corporation Proprietary
All rights reserved. Unpublished work, ©2005
Information is proprietary to AAC or one of its' customers

Structural attachment

Flanged shear plates on each face carry vertical and lateral loads (LHS shown).

Shear plates attach to rotating bearing interface (TBD)

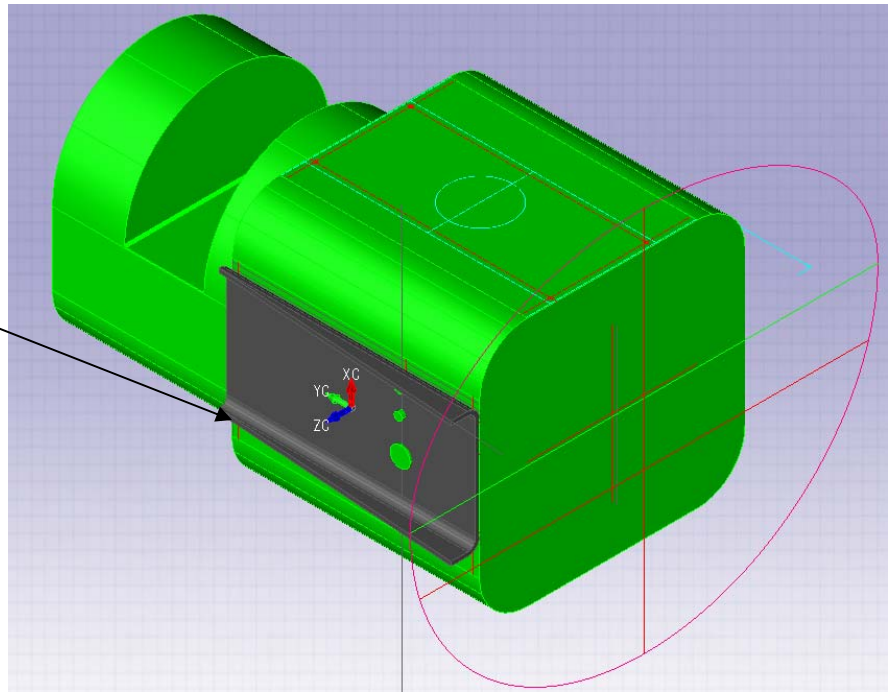

Overview

Adaptive Aerospace Corporation Proprietary
All rights reserved. Unpublished work, ©2005
Information is proprietary to AAC or one of its' customers

Structural attachment

✈ Inertia loads defined

CAR integration weight and balance PRELIMINARY

Item	Description	Weight	Arm	Moment	Estimate	Calculated	Actual	Basis
	Summary	211	13.20251	2785.73				
1	CAR	97	13.25	1285.25			x	BH 29NOV05
2	Rotating fairing	26	25	650	x			
3	Aft fairing	16	25.53	408.48	x			
4	Support structure	35	9	315	x			
5	Rotating mechanism	12	2	24	x			
6	Drive motor	15	2	30	x			
7	Gear head	3	2	6	x			
8	Motor control			0	x			Fuselage mount
9	MSP	3	17	51	x			
10	Radome (modified)	4	4	16	x			

Adaptive Aerospace Corporation Proprietary
All rights reserved. Unpublished work, ©2005
Information is proprietary to AAC or one of its' customers

Structural attachment

- Inertia loads defined

	Sideward	Upward	Downward
Ultimate Inertia load factor	1.5	3	6.6
Inertia load	316.5	633	1392.6
Inertia moment	4178.595	8357.19	18385.82
Moment reaction Face to face vertical			15.63
Vertical reaction			1176.316
Rv/4			294.079
Vertical shear			
Aero load			
	IN WORK		

Adaptive Aerospace Corporation Proprietary
All rights reserved. Unpublished work, ©2005
Information is proprietary to AAC or one of its' customers

Rotating fairing design

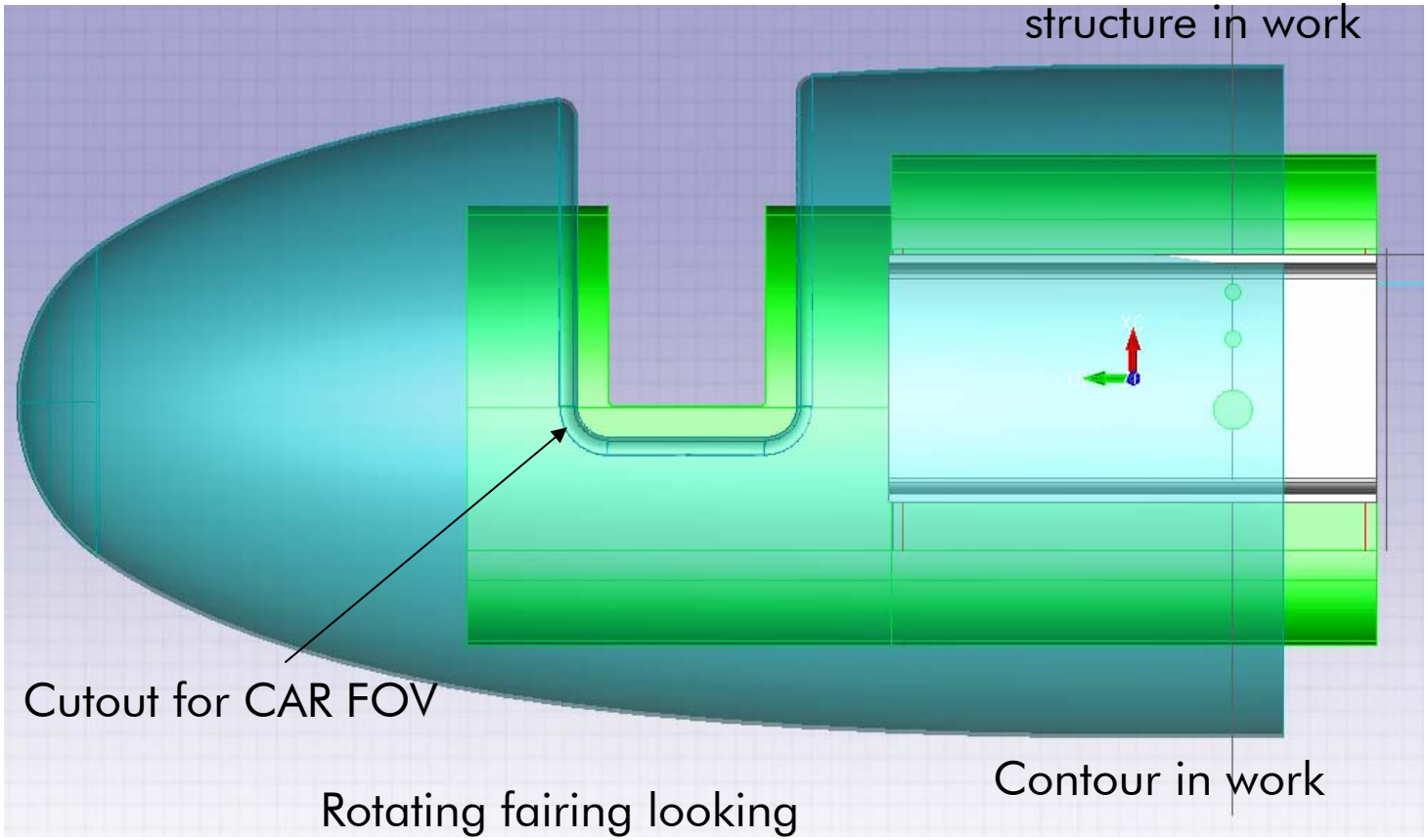

Adaptive Aerospace Corporation Proprietary
All rights reserved. Unpublished work, ©2005
Information is proprietary to AAC or one of its' customers

Fairing design

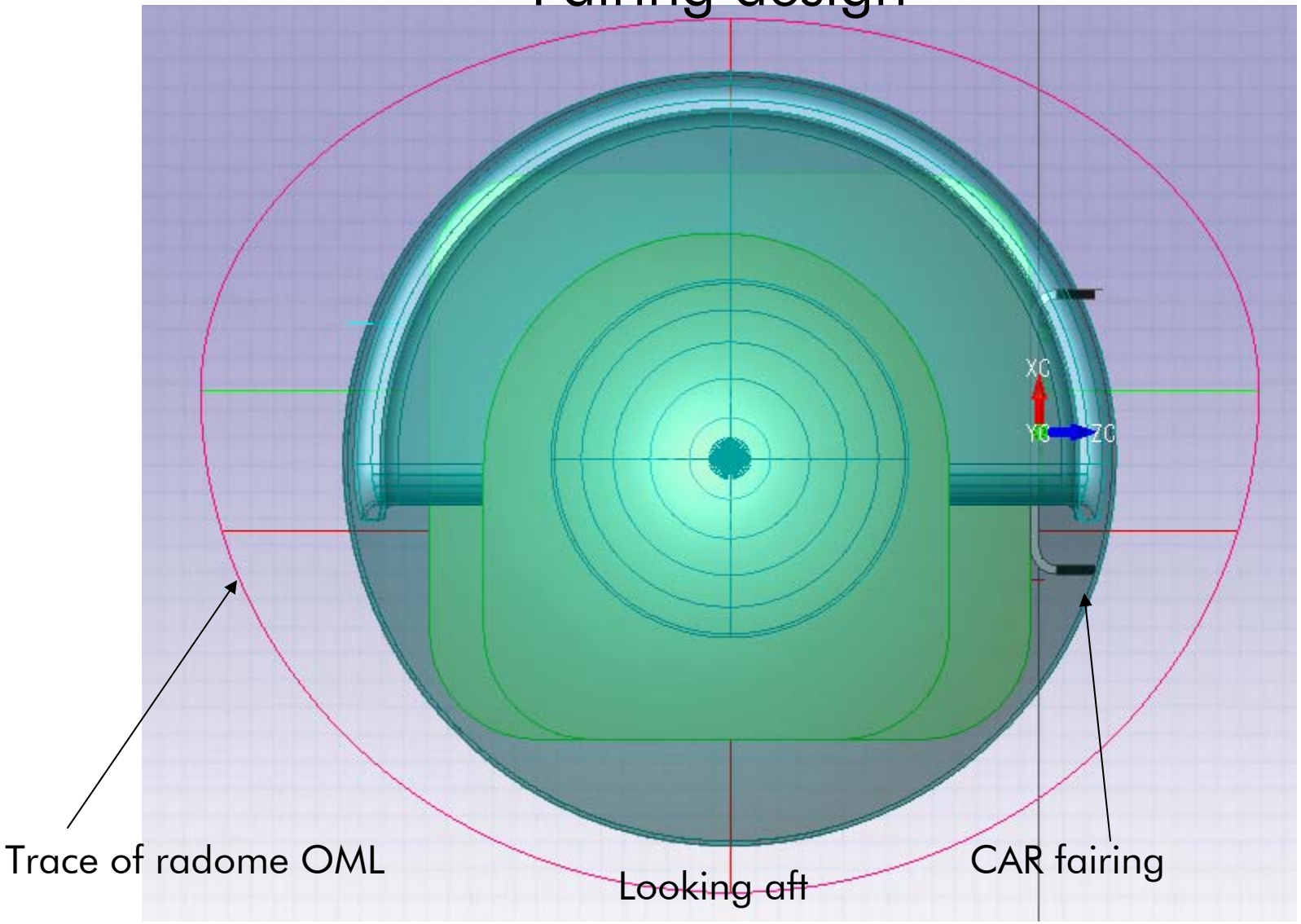

Adaptive Aerospace Corporation Proprietary
All rights reserved. Unpublished work, ©2005
Information is proprietary to AAC or one of its' customers

Rotating elements

- CAR and rotating fairing
  - Supported by thin section bearing
  - Integral drive gear being evaluated

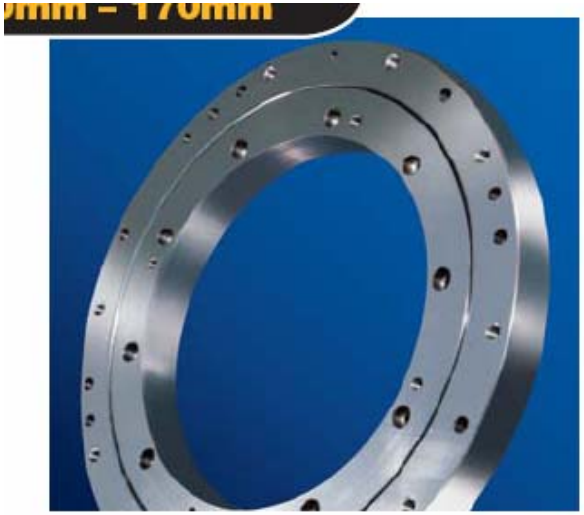

Adaptive Aerospace Corporation Proprietary
All rights reserved. Unpublished work, ©2005
Information is proprietary to AAC or one of its' customers

Rotating elements

- CAR and rotating fairing
  - Electric motor gear drive
  - Drives to index location
  - Mechanical index provides lock at selected location
  - 5 degree increments provides 72 positions
    - Experimental requirement drives index increment

Adaptive Aerospace Corporation Proprietary
All rights reserved. Unpublished work, ©2005
Information is proprietary to AAC or one of its' customers

Rotating element indication and control

- Flight deck control
  - Control- STOW switch
    - Positions CAR to minimize aero effects of opening
    - Primarily for TO and landing / IFR cruise
    - Selecting STOW locks out operator control
  - Indication
    - Amber "CAR UNSTOWED" light illuminates with operator console in control
- Operator console control / indication
  - Control- Rotary switch to index position
  - Indication- analog dial indicator, LCD display- TBD

Adaptive Aerospace Corporation Proprietary
All rights reserved. Unpublished work, ©2005
Information is proprietary to AAC or one of its' customers

Flight safety

- Structural / analytical basis
  - Experimental aircraft- no certification requirement
  - Use AC43.13-2A inertial ultimate load guidelines for Part 23 aircraft
  - Determine air loads for anticipated operation
  - Evaluate structure as if for STC / structures DER review of final analysis
  - All load paths to exhibit positive margins at ultimate

Adaptive Aerospace Corporation Proprietary
All rights reserved. Unpublished work, ©2005
Information is proprietary to AAC or one of its' customers

Flight safety

- Flight test
  - FAA DER test pilot
  - Recommend baseline and post-mod evaluation
  - Flight test evaluation:
    - Lateral / directional stability
    - Longitudinal stability
    - Stalls (primarily initial buffet)
    - Airspeed and altitude (pitot static) error
      - 4 leg GPS technique
    - Accomplished with CAR stowed and operating

Adaptive Aerospace Corporation Proprietary
All rights reserved. Unpublished work, ©2005
Information is proprietary to AAC or one of its' customers

More to come!

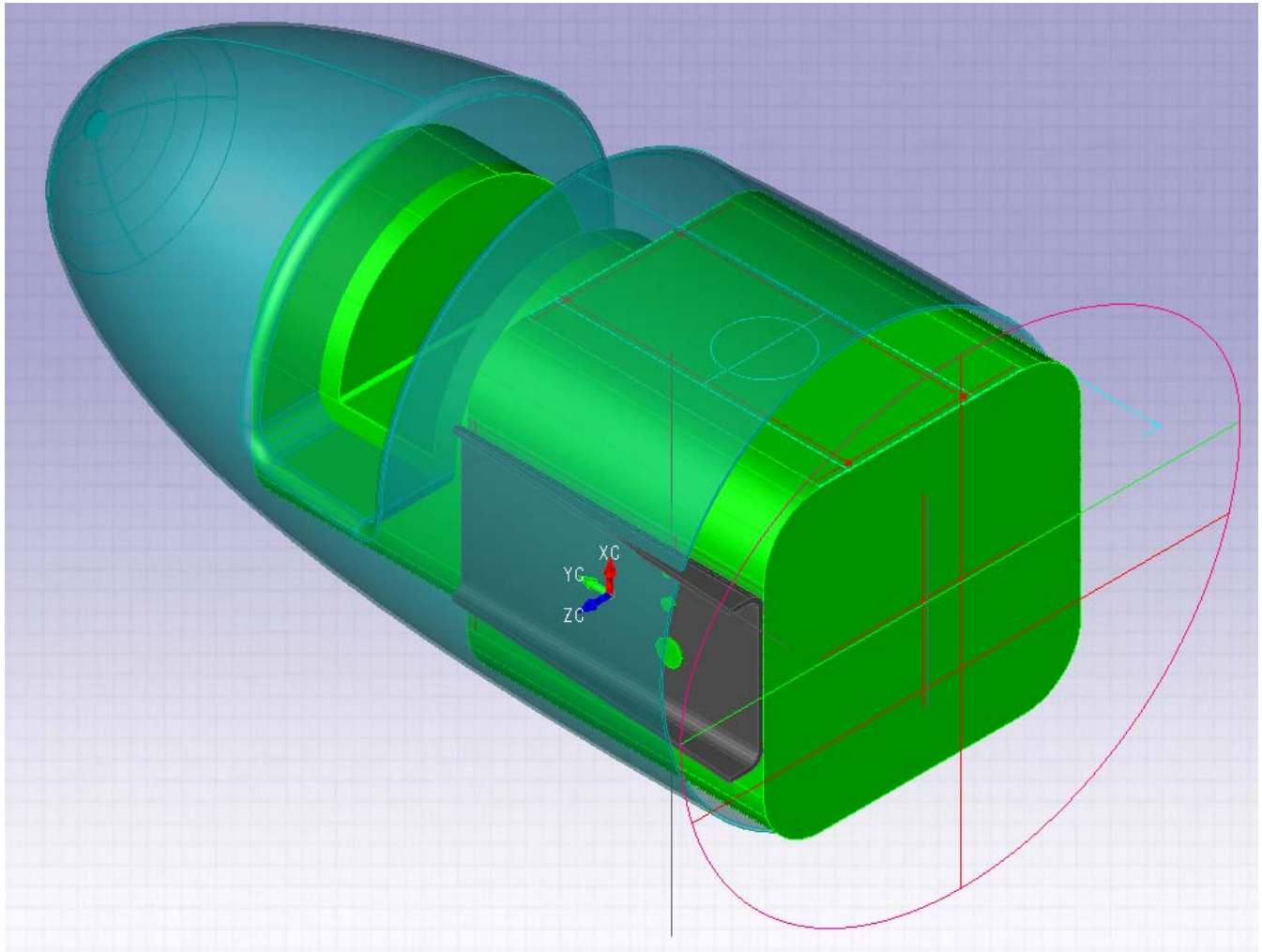

Adaptive Aerospace Corporation Proprietary
All rights reserved. Unpublished work, ©2005
Information is proprietary to AAC or one of its' customers